ACHILLES LOGOS
ACHILLES "A" LOGO – **C493**
ACHILLES WAVE LOGO – **C492**

SEAT PARTS
SEAT – **WST77LG** – GRAY PAINTED
SEAT CHANNEL PATCH – **DC412LG**
SEAT PLASTIC CHANNELS – **EA003**

TOWING D-RINGS
35MM – **C414GY**

LIFELINE D-RINGS & ROPE
WEBBED D-RING – **C480L & C480R**
LIFELINE - **PEROPE**

TEAR DROP RUBSTRAKE
GRAY / WHITE -**VDF075WH**

AIR VALVE PARTS
COMPLETE – **C342GY**
VALVE CAP – **C349GY**
CAP DIAPHRAM – **C348**
VALVE FLAPPER – **C3421**
VALVE STRAP – **C343N**
O-RING – **C344**
VALVE BASE – **C333**
BASE RING – **C345GY**

OARS & OARLOCK PARTS
OARS – **DC630**
OARLOCK – **DC4124GY**
SCREW CAPS – **DC393**
PIN & RIVET SET – **COM165**
OAR CLIP – **SJ940**
OAR HOLDER – **DC4123GY**

FLOOR PARTS
AIR FLOOR – **FQL077L**
FLOOR VALVE BASE – **C333A**
GAS TANK PAD – **GASTP**
TANK TIE DOWN – **C410LG**

TRANSOM PARTS
INSIDE TRANSOM PLATE – **SC620**
OUTSIDE TRANSOM PLATE – **TBD**

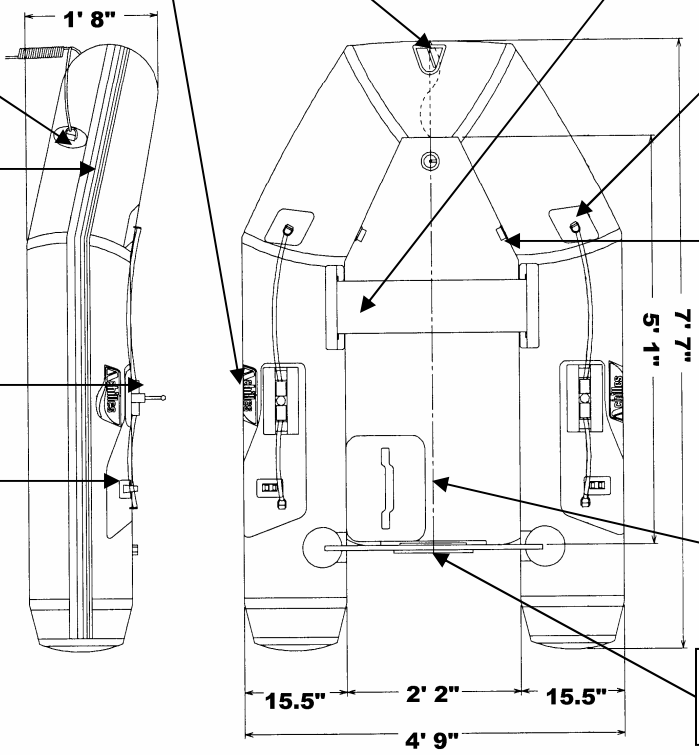

OTHER PARTS
REPAIR KIT – **C210LG**
FOOT PUMP BRAVO 10 W/E133 GUAGE – **ST512G**
CARRY BAG – **SJ825**

(**OPTIONAL**)
UNDER SEAT STOWAGE BAG W/POCKETS -**USSTBAG**

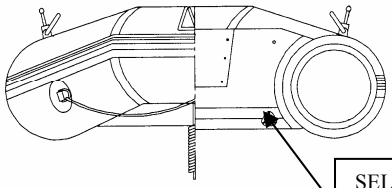

SELF-BAILER PARTS
BAILER VALVE (INCLUDES FLAPPER) – **C441A**
BAILER PLUG – **C441B**
BAILER FLAPPER – **C441C**

LSI-230 (2008)

LINE DRAWING & PARTS LIST