ACHILLES LOGOS
ACHILLES WAVE LOGO – **C492**

BOW D-RING –**C412GY**

SEAT PARTS
SEAT – **WST2LG** – GRAY PAINTED
SEAT CHANNEL PATCH – **DC413LG**
SEAT PLASTIC CHANNELS – **EA003**

LIFELINE D-RINGS & ROPE
25MM D-RING – **C413GY**
LIFELINE - **PEROPE**

RUBSTRAKE
GRAY / WHITE -**VA083WH**

AIR VALVE PARTS
COMPLETE – **C342GY**
VALVE CAP – **C349GY**
CAP DIAPHRAM – **C348**
VALVE FLAPPER – **C3421**
VALVE STRAP – **C343N**
O-RING – **C344**
VALVE BASE – **C333**
BASE RING – **C345GY**

OARS & OARLOCK PARTS
OARS – **DC630**
OARLOCK – **DC4126GY**
SCREW CAPS – **DC393**
PIN & RIVET SET – **COM165**
OAR CLIP – **SJ940**

FLOOR BOARD –**DC517**

MOTORMOUNT & PARTS
MOTORMOUNT - **DC540**
MM LACING STRIP – **DC466GY**
MM BECKET PATCH – **DC467GY**

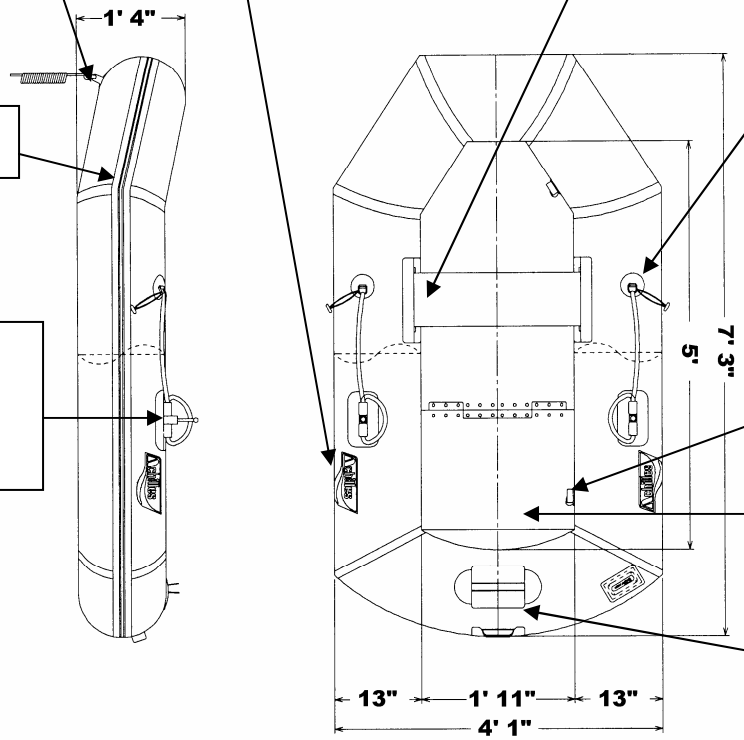

OTHER PARTS
REPAIR KIT – **C210LG**
FOOT PUMP BRAVO 1 – **C512**
CARRY BAG – **DC819**

(**OPTIONAL**)
UNDER SEAT STOWAGE BAG W/POCKETS – **USSTBAG**
PRESSURE GUAGE – **E132**

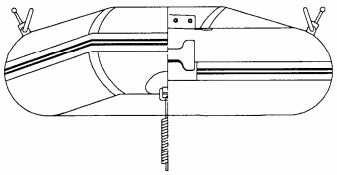

LT2 (2008)

1997 – CURRENT
LINE DRAWING & PARTS LIST